HIPOWER®
A YANMAR COMPANY

# Heavy Duty Industrial DIESEL GENERATOR

MODEL
## HDI-300F

60Hz STANDBY POWER RATINGS

298kW/60Hz//1800RPM

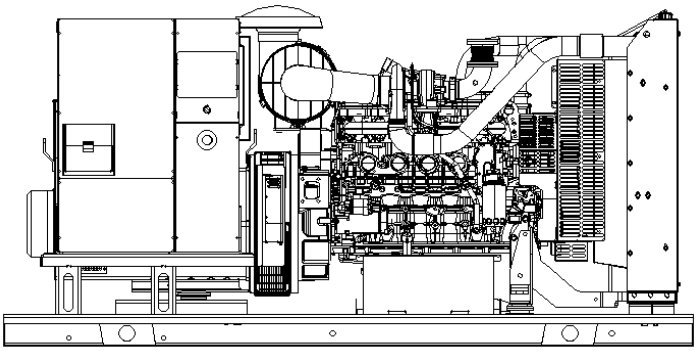

| VOLTAGE VAC | 120/240V | 120/208V | 139/240V | 277/480V | 347/600V |
|---|---|---|---|---|---|
| RATING | Standby | Standby | Standby | Standby | Standby |
| PHASE | N/A | 3 | 3 | 3 | 3 |
| PF | N/A | 0.8 | 0.8 | 0.8 | 0.8 |
| HZ | N/A | 60 | 60 | 60 | 60 |
| KW | N/A | 300 | 300 | 300 | 300 |
| KVA | N/A | 375 | 375 | 375 | 375 |
| AMPS | N/A | 1041 | 902 | 451 | 361 |

## Description

HIPOWER® Heavy Duty Industrial generators are an efficient, reliable and versatile source of back-up electrical power that have been designed to operate in the most extreme working conditions. All HIPOWER® Heavy Duty Industrial generators combine an innovative design and the use of high quality materials that provide the user with the most dependable power that can be relied on for non-stop power with easy to operate controls.

Powered by a radiator-cooled, industrial FPT Diesel engine that meets current Environmental Protection Agency (EPA) TIER 3 exhaust emission regulations, driving a single bearing, four-pole, three-phase alternator, with IP23 protection. The Emergency Power kVA rating is given with a 125 degree °C alternator winding temperature rise.

## HIPOWER® Features and Benefits

**FTP** Diesel Engine: Long-life, heavy-duty, 4-cycle, direct injection engine for economy of operation and maximum reliability and durability.

**Cooling:** Radiator with belt driven pusher fan.

**Air Filter:** Heavy-duty replaceable element air-cleaner.

**Alternator:** Single bearing, rotating field, self-excited, self-ventilated, 12-wire re-connectable, 60Hz brushless alternator and Class H insulation. Automatic voltage regulator (AVR) providing close voltage regulation and skVA starting capability for electric motor loads.

**Enclosure:** Fully sound attenuated enclosure, manufactured using 7-gauge steel and thicker for the base; 12-gauge and 14-gauge for the enclosure, Interpon A4700 primer, in combination with Interpon 600 series coatings, are designed for exterior exposure and offers excellent light and weather resistance exceeding 1400-hr salt spray test. A 1" thick layer of durable sound insulating, oil and fire resistant foam material is installed all around the inside of the enclosure to allow high-pressure water cleaning. Vertical air discharge for quiet operation. Wide steel lockable access doors with rubber seals, easy access for maintenance and service activities, lift off Die Cast Zinc hinges textured black powder coat and corrosion resistant hardware and fasteners.

**Exhaust:** Low noise, steel residential-type exhaust silencer with rain cap.

**Fuel Filtration:** Standard and secondary water separator with visible level on fuel filters.

**Controls:** Digital control panel with manual and automatic start and stop features. Many programmable automatic functions for local and remote controls with LED lights and tamper proof engine hour recorder.

**Certification:** Generator set is UL 2200 Listed and CSA certified and meets ISO 8528-5.

Codes and Standards Compliances used where applicable

## APPLICATION DATA

| ENGINE SPECIFICATION | | LUBRICATION SYSTEM | |
|---|---|---|---|
| Manufacturer | FPT - Iveco | Oil pan capacity - gal (L) | 6 (23) |
| Model | C10TE1D | Oil pan capacity with filter - gal (L) | 7.4 (28) |
| EPA certified | Tier 3 | Oil cooler | Liquid |
| Crankshaft speed | 1,800 rpm | Recommended lubricating oil grade | SAE 10W-30 / ACEA E3/E5 (refer to owners manual) |
| Type | Diesel, 4-stroke | Oil consumption at full load | < 0.1% of fuel consumption |
| Injection | Direct | Oil pressure – psi (kPA) | 72.6 (500) |
| Aspiration | Turbocharged aftercooled air/air | ENGINE ELECTRICAL SYSTEM | |
| Number of Cylinders | 6 | Starting motor voltage | 24 volt |
| Cylinder arrangement | In-line | Cold Cranking Amps - minimum | 650 Amp |
| Displacement CID (liters) | 628.52 (10.3) | Battery charging Alternator | 90 Amp |
| Bore and Stroke ins (mm) | 4.92 x 5.5 (125 x 140) | Battery capacity | 650CCA 850CA 115RC GROUP SIZE 24F |
| Nominal power | 449 hp | | |
| Cooling | Liquid | | |
| Governor | Electronic | | |
| Governor Regulation Class | ISO 8528 Part 1 Class G3 | | |
| Frequency Regulation | Isochronous | | |
| Starting motor & alternator | 24 Volt | | |
| Compression ratio | 16.5:1 | | |
| Air cleaner type | Heavy duty - single cartridge | | |
| **ALTERNATOR SPECIFICATION** | | | |
| Manufacturer | STAMFORD | | |
| Model 120/240V Single phase | N/A | | |
| Model 120/208V Three phase | S4L1D-E4 | | |
| Model 277/480V Three phase | S4L1D-E4 | | |
| Model 347/600V Three phase | S4L1S-D4 | | |
| Alternator Type | Four pole, rotating field | | |
| Excitation System | Brushless | | |
| Power factor | 0.8 | | |
| Number of leads | 12 leads, reconnectable | | |
| Stator Pitch | 2/3 | | |
| Insulation | Class H | | |
| Windings – Temperature Rise | Class F (125/40° C) | | |
| Enclosure (IEC-34-S) | IP23 | | |
| Bearing | Single, sealed | | |
| Coupling | Flexible disc | | |
| Amortisseur windings | Full | | |
| Voltage regulation – no load to full load with MX341 AVR | ± 1% | | |
| TIF | <50 | | |
| Radio Frequency Emissions compliance | Meets requirements of most industrial and commercial applications | | |
| Line harmonics | 5% maximum | | |

# HDI300F - 298Kw
## Heavy Duty Industrial

## STANDARD FEATURES

| Enclosure (If selected) | Engine System | Fuel System |
|---|---|---|
| Rust-Proof Fastener with Nylon Washers Protect Finish | Oil Drain Extension | Primary Fuel Filter |
| High Performance Sound-Absorbing Material (L1) | Air Cleaner | Flexible fuel lines |
| Gasketed Doors | Fan Guard | **Generator set** |
| Air Discharge Hoods for Radiators-Upwards Pointing | Factory Filled Oil | 80% Rated Main Line Circuit Breaker |
| Lift Off Door Hinges | Battery Charging Alternator | Separation of Circuits – Multiple Breakers (load center) |
| Stainless Steel Lockable Handles | **Alternator Systems** | Separation of Circuits – High / Low Voltage |
| Textured Polyester Powder Coat | 12 Leads (3-Phase, Non 600V) | Internal Genset Vibration Isolation |
| **Cooling System** | Class H Insulation Material | Wrapped Exhaust Piping |
| Factory-Installed Radiator | Vented Rotor | Standard Factory Testing |
| Radiator Drain Extension | 2/3 Pitch | 2 Year/2000 hours Limited Warranty |
| 50/50 Ethylene Glycol Antifreeze | Full Load Capacity Alternator | Silencer Mounted in the Discharged Hood (Enclosed Only) |
| **Electrical Systems** | Protective Thermal Switch | Emergency Stop |
| Battery Cables and Battery Tray | Permanent Magnet Excitation | |
| Batteries | Skewed Stator | |

## CONTROL SYSTEM

- Charge alternator failure alarm
- 4-Line back-lit LCD text display
- Front panel editing with PIN protection
- Customizable status screens
- Power save mode
- 11 configurable inputs
- 8 configurable outputs
- Flexible sensor inputs
- Configurable timers and alarms
- 3 configurable maintenance alarms
- Multiple date and time scheduler
- Configurable event log (250)
- "Protections disabled" feature
- kW protection
- Reverse power (kW) protection
- LED and LCD alarm indication
- Power monitoring (kWh, kVAr, kVAh, kVArh)
- Load switching (load shedding and dummy load outputs)
- Independent Earth Fault trip
- Fuel usage monitor and low fuel alarms
- Configurable display languages
- User selectable simultaneous RS232, RS485 & Ethernet communications
- MODBUS RTU & TCP support
- Configurable MODBUS pages
- Fully configurable via DSE Configuration Suite PC software
- Data logging to assist with fault finding
- PLC editor allows user configurable functions to meet specific application requirements
- Licence-free PC software
- Multiple date and time scheduler
- DSENet® expansion compatible

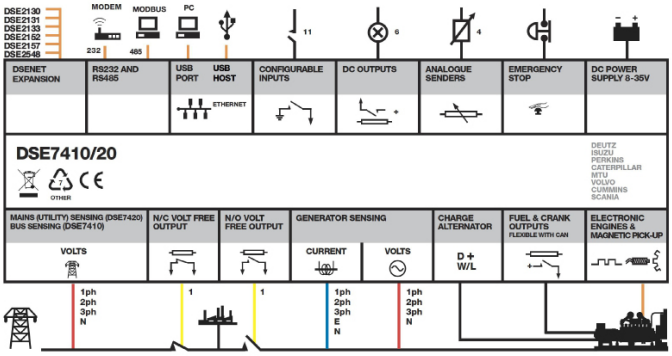

# HDI300F - 298Kw
## Heavy Duty Industrial

## CONFIGURABLE OPTIONS

| ENCLOSURE | ENGINE SYSTEM | ELECTRICAL SYSTEM |
|---|---|---|
| Open Skid | Oil heater | Battery Warmer |
| Weather Enclosure | 120V-1ph Water Jacket Heater (with Isolation Valves) | 10A Battery Charger |
| Level 1 Sound attenuated | 208V-3ph Water Jacket Heater (with Isolation Valves) | 6A Battery Charger |
| Level 2 Sound attenuated | **CIRCUIT BREAKER OPTIONS** | 10 Positions Load Center (100Amps) |
| **ALTERNATOR SYSTEM** | LSI Electronic trip 80% and 100% rated | Remote ESTOP with N3R break glass |
| Anti-condensation heater | LSIG Electronic trip 80% and 100% rated | 120V GFCI receptacle |
| Alternator upsizing | Second Main Line Circuit Breaker | 10A Relay common alarm |
| Rheostat | Mechanical Lugs | 10A Run Relay |
| MX321 AVR | Shunt trip | 8 Leds Remote Announciator on Surface mounted Box |
| | Auxiliary Contacts for Main and Secondary Breaker | 16 Leds Remote Announciator on Surface mounted Box |
| | | 24 Leds Remote Announciator on Surface mounted Box |

| GENERATOR SET |
|---|
| Extended Factory Load Testing |
| Extended Warranty |
| Seismic Mounts |

## ENGINEERED OPTIONS

| ENCLOSURE | ENGINE SYSTEM | ELECTRICAL SYSTEM |
|---|---|---|
| Snow Hood (only with L2) | Fluid Containment Pan | AC/DC Enclosure Lighting Kit with Timer |
| Air Outlet Gravity dampers | | Enclosure Heater |
| Air Inlet motorized dampers (only with L2) | | 240V Twist lock receptacle |
| **CIRCUIT BREAKER OPTIONS** | **CONTROL SYSTEM** | **GEENRATOR SET** |
| 3rd Breaker system | Spare inputs (x4) / output (x4) | Special Testing |
| Shunt Trip on 3rd Breaker | DSE8610 - Parallel controller with motorized CB | **ALTERNATOR SYSTEM** |
| Auxiliary contact on 3rd Breaker | DSE2130 - DSENet Input Expansion Module | Tropical coating |
| **FUEL TANK** | DSE2157 - DSENet Output Expansion Module | |
| Custom Size – 72hr and 96hr | DSE855 - DSENet USB to Ethernet ModBus TCP/IP Communication Module | |
| Custom type to meet State spec. | DSE892 - DSENet USB to Ethernet ModBus TCP/IP - SNMP Comm. Module | |
| Vent Extensions | DSE2520 - Remote Display Module | |
| Overfill Protection Valve | | |

## OPERATING DATA

| FUEL SYSTEM | |
|---|---|
| Recommended fuel | # 2 - ULSD - EN590 |
| Fuel supply line, min. ID mm(in.) | 9.5 - (3/8") |
| Fuel return line,min. ID, mm (in.) | 9.5 - (3/8") |
| Max. lift, fuel pump, type, m (ft) | 1 (3) |
| Fuel filter | Secondary 5 Microns @ 98% Efficiency |

| FUEL CONSUMPTION | | (Standby Power Rating) |
|---|---|---|
| 100% load | US Gal/hr (L/hr) | 21.8 (82.5) |
| 75% load | US Gal/hr (L/hr) | 16.3 (61.6) |
| 50% load | US Gal/hr (L/hr) | 10.9 (41.2) |
| 25% load | US Gal/hr (L/hr) | 5.4 (20.4) |

| COOLING SYSTEM | | |
|---|---|---|
| Engine cooling air flow | cfm ($m^3$/min) | 16,315 (462) |
| Alternator cooling flow | cfm ($m^3$/min) | 2,034 (57.6) |
| Combustion air flow | cfm ($m^3$/min) | 907 (25.7) |
| Total cooling air flow (engine+alternator+combustion) | cfm ($m^3$/min) | 19,256 (545.3) |
| Total cooling capacity | US gal (liters) | 12.6 (48) |
| Max. Operating Temperature | °F (°C) | 122 (50) |

| EXHAUST | | |
|---|---|---|
| Exhaust gas flow | cfm ($m^3$/min) | 2240 (63.4) |
| Max. Exhaust temp at full load degrees | °F (°C) | 1020 (549) |
| Max. permissible back pressure | in H2O (kPA ) | 20.5 (5.1) |

## Starting Capabilities (sKVA)

| | 120/240V (1PH) | | | | | 277/480V | | | | | 208/240V | | | | | 347/600V | | | | |
|---|---|---|---|---|---|---|---|---|---|---|---|---|---|---|---|---|---|---|---|---|
| | 10% | 15% | 20% | 25% | 30% | 10% | 15% | 20% | 25% | 30% | 10% | 15% | 20% | 25% | 30% | 10% | 15% | 20% | 25% | 30% |
| Standard | n/a | n/a | n/a | n/a | n/a | 300 | 430 | 670 | 900 | 1150 | 200 | 300 | 410 | 560 | 730 | 190 | 300 | 450 | 570 | 740 |
| Upsized | n/a | n/a | n/a | n/a | n/a | 350 | 550 | 790 | 1050 | 1350 | 220 | 350 | 500 | 660 | 850 | 250 | 290 | 550 | 730 | 930 |

## Circuit Breaker

| | 120/240V (1PH) | 277/480V | 120/208V | 120/240V | 347/600V |
|---|---|---|---|---|---|
| Make and model | n/a | ABB T6N600TW | ABB T7SB2EB000000XX | ABB T7SB1DB000000XX | ABB T5N400TW |
| Amps | n/a | 600 A | 1200 A | 1000 A | 400 A |

# HDI300F - 298Kw
## Heavy Duty Industrial
## DIMENSIONS, WEIGHTS & SOUND LEVELS

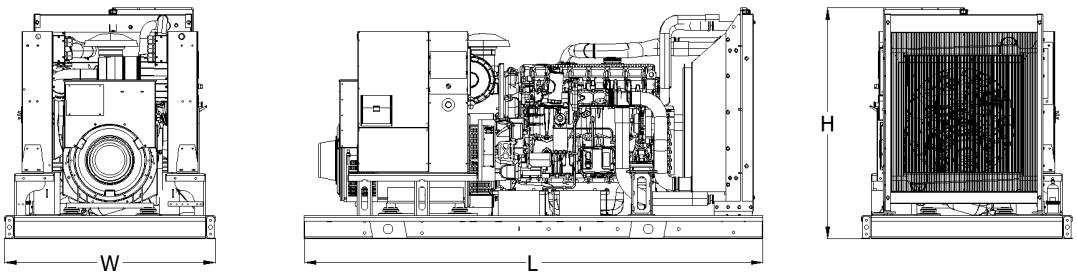


| CONFIGURATION | RUN TIME (HOURS) | USABLE CAPACITY (Gal.) | L = Length | W = Width | H = Height | Weight lbs | dBA |
|---|---|---|---|---|---|---|---|
| OPEN SET | No Tank | - | 133″ | 55″ | 68.5″ | 5,915 | N/A |
| | 28 | 619 | 199″ | 55″ | 21″ | 2,233 | |
| | 57 | 1238 | 199″ | 55″ | 39″ | 3,183 | |

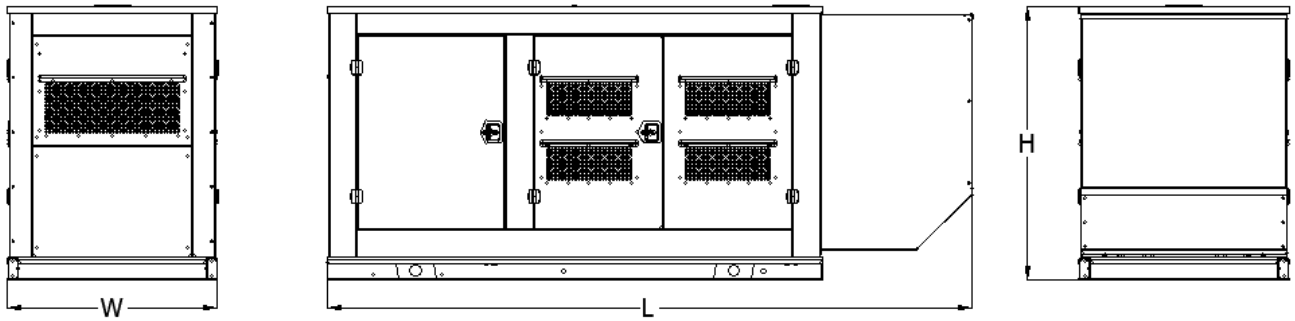


| CONFIGURATION | RUN TIME (HOURS) | USABLE CAPACITY (Gal.) | L = Length | W = Width | H = Height | Weight lbs | dBA |
|---|---|---|---|---|---|---|---|
| WEATHER ENCLOSURE / LEVEL 1 ENCLOSURE | No Tank | - | 173″ | 55″ | 70.1″ | 7,800 | 78 |
| | 28 | 619 | 199″ | 55″ | 21″ | 2,233 | |
| | 57 | 1238 | 199″ | 55″ | 39″ | 3,183 | |
| LEVEL 1 ENCLOSURE | No Tank | - | 173″ | 55″ | 70.1″ | 7,830 | 76 |
| | 28 | 619 | 199″ | 55″ | 21″ | 2,233 | |
| | 57 | 1238 | 199″ | 55″ | 39″ | 3,183 | |

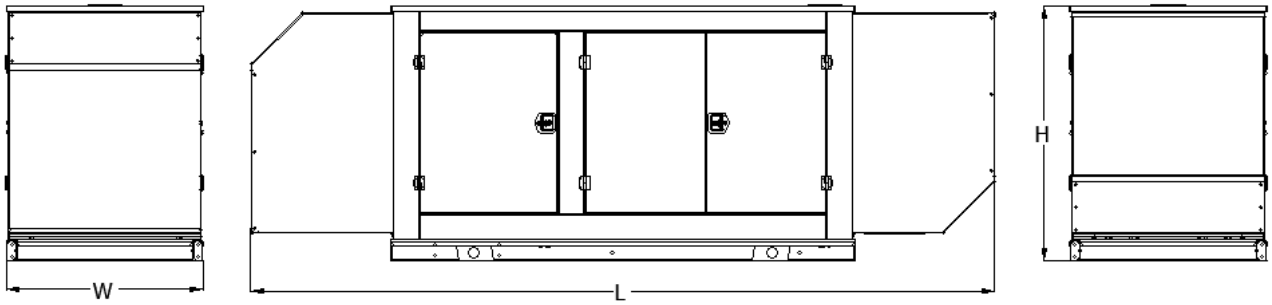


| CONFIGURATION | RUN TIME (HOURS) | USABLE CAPACITY (Gal.) | L = Length | W = Width | H = Height | Weight lbs | dBA |
|---|---|---|---|---|---|---|---|
| LEVEL 2 ENCLOSURE | No Tank | - | 212″ | 55″ | 70.1″ | 7,930 | 73 |
| | 28 | 619 | 251″ | 55″ | 21″ | 2,233 | |
| | 57 | 1238 | 251″ | 55″ | 39″ | 3,183 | |

* All measurements are approximate and for estimation purposes only. Weights are without fuel tank. Sound levels measured at 23ft (7m) and does not account for ambient site conditions.

Intertek

Conforms to UL STD 2200
Certified to CSA STD C22.2#100
Certified to CSA STD C22.2#14